SOSEN

SPECIFICATIONS

SS-1000NP-ML500*
CC DRIVER

Model: SS-1000NP-ML500*

Power: 1000W

Rev.: V00

Release date: 2025-08-06

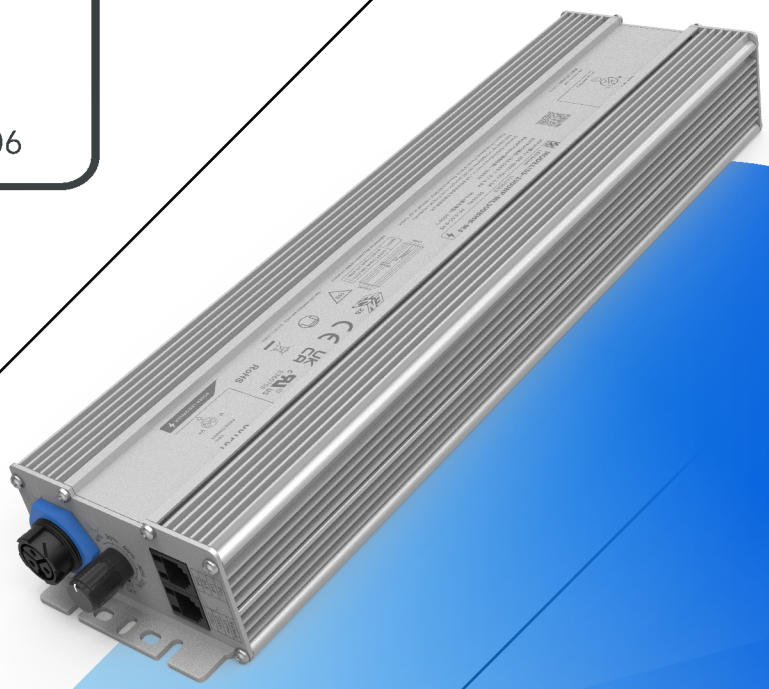

SS-1000NP-ML500 Series LED Driver

Features

- Efficiency up to 97%
- Dimming: 0-10V,PWM,Resistor,Timing
- Surge protection: CM: 6kV, DM: 6kV
- AUX Power：12V/0.3A
- Constant Lumen, Life Warning
- Standby Power<0.5W
- Communication with PC
- Protections: SCP/OTP/UVP/OPP
- Warranty: 5 years

E360758

Description

SS-1000NP-ML500* is 1000W non-isolated constant current LED Driver with 180-528Vac input and wide O/P voltage range and adjustable O/P current by program. LED luminaire manufactures can easily design luminaires and reduce cost,It has comprehensive protection, including short circuit protection and over-temperature protection.
Applications:
Plant lights, court lights, fish collector lights

Model List:

Model	AC Input Range	Max. Pout	Vout Range	Full Power Vo Range	Iout	THD (Typ.)	PF(Typ.)	Eff.(Typ.)	Max.Tc
SS-1000NP-ML500*	180-528Vac	1000W	150-500V	252-500V	0.7-4.0A	10%	0.95	97%	90°C

Note:
1.Default Tested: at 400Vac, full load, Ta 25°C;
2.The performance of the LED Driver can be guaranteed within the full power Vo range. The voltage lower than full power Vo range, it is need to test the performance with the LED module ;

SHENZHEN SOSEN ELECTRONICS CO.,LTD.
10F, Pengzhanhui No 1 Building, Zhongxin Road No 233, Xinqiao Street, Baoan District, Shenzhen, China
0755-29358800 www.sosen.com sosen@sosen.com

"*" Means Additional Function

"*"	AC INPUT		DC OUTPUT			Dimming		Output-Ground	Remark
	Cable	M19-3Pin	Cable	M19-2Pin	M19-3Pin	Knob&RJ25	M12-3Pin		
BHB	✓		✓			✓			
BHB-G	✓		✓			✓		✓	
BHB-M2		✓		✓		✓			
BHB-M3		✓			✓	✓		✓	
BH-M2		✓		✓			✓		
BH-M3		✓			✓		✓	✓	

Input Characteristics:

Parameter	Min.	Typ.	Max.	Remark
Rated AC Input Range	200Vac		277Vac	<Ta:45°C
	277Vac		480Vac	<Ta:50°C
AC Input Range	180Vac		528Vac	
Input Frequency Range	47Hz	50/60Hz	63Hz	
Max Input Current			6.0A	200Vac ,Full load
Max Input Power			1200W	200Vac, Full load
Max Inrush Current(220Vac)			20A	Cold start
Max Inrush Current(347Vac)			30A	Cold start
Max Inrush Current(400Vac)			40A	Cold start
Max Inrush Current(480Vac)			50A	Cold start
Standby Power			0.5W	230Vac/50Hz, Dim-off
Power Factor	0.95	0.97		220Vac/60Hz, Full load
	0.90			200-480Vac, 70-100% load
THD		6%	10%	347Vac/60Hz, Full load
			20%	200-480Vac, 70-100% load

SHENZHEN SOSEN ELECTRONICS CO.,LTD.
10F, Pengzhanhui No 1 Building, Zhongxin Road No 233, Xinqiao Street, Baoan District, Shenzhen, China
0755-29358800 www.sosen.com sosen@sosen.com

O/P Characteristics:

Parameter	Min.	Typ.	Max.	Remark
O/P Voltage Range	150V		500V	Power derated @150-252V
Rated O/P Voltage	252V		500V	Po=Vo*Io=1000W, Full load
Rated O/P Current	2.0A		4.0A	4.0A for 252V,2.0A for 500V
Adj. O/P Current (AOC)Range	0.7A		4.0A	Adjustable by program
No Load Voltage			600V	
Efficiency @220Vac	93.0%	95.0%		O/P 500V/2.0A
Efficiency @347Vac	95.0%	97.0%		O/P 500V/2.0A
Efficiency @400Vac	95.0%	97.0%		O/P 500V/2.0A
Efficiency @480Vac	95.0%	97.0%		O/P 500V/2.0A
O/P Current Tolerance	-5%		+5%	
O/P Current Ripple(PK-AV)		5%	10%	Full load
Start-up Current Overshoot			10%	Full load
Start-up Time			0.5S	230Vac,Full load
Line Regulation	-2%		+2%	Full load
Load Regulation	-2%		+2%	
Temperature Coefficient	-0.03%/°C		+0.03%/°C	Tc:0°C~90°C
OTP	90°C		100°C	Drop current when OTP, and it can be automatically restored after the abnormality is removed.
Short Circuit Protection				Driver will not be damaged, Constant current mode

SHENZHEN SOSEN ELECTRONICS CO.,LTD.
10F, Pengzhanhui No 1 Building, Zhongxin Road No 233, Xinqiao Street, Baoan District, Shenzhen, China
0755-29358800 www.sosen.com sosen@sosen.com

Other Characteristics:

Parameter		Min.	Typ.	Max.	Remark
AUX Power	O/P Voltage	10.8V	12V	13.8V	
	O/P Current			300mA	
0-10V Dimming (Optional)	Dim Vmax	0V		12V	Negative dimming by programming Dimming prohibits reverse connection. DIM+ source current 110uA .
	Dim Range	10%loset		100%loset	
	Rec.Dim Range	0V		10V	
0-10V Dimming (Optional)	Rec.Dim Range	0V		10V	DIM+ Maximum sink current is 40uA Dimming prohibits reverse connection. 5-0V by programming
PWM Dimming (Optional)	PWM High	9.8V		10.2V	
	PWM Low	0V		0.3V	DIM+ source current 110uA .
	Frequency	1KHz		2KHz	Dimming prohibits reverse connection.
	PWM Duty	0%		100%	
Resistor Dimming (Optional)	Resistance	0Kohm		100Kohm	
	Dim Range	10%loset		100%loset	DIM+ source current 110uA .
Dim to Off (Positive logic)	Dim-off	7%	8%	9%	By DC voltage, PWM,dimming ratio Auxiliary source no-load test
	Dim-on	8%	9%	10%	By DC voltage, PWM,dimming ratio Auxiliary source no-load test
NTC Founction(Optional)		By programming			External resistance value 10K Ω, B value 3950 or 3435 NTC thermistor, set parameters through corresponding programs
Timing Curve(Optional)		By programming			Set by program
Constant Lumen(Optional)		By programming			Set by program
Life Warning(Optional)		By programming			Set by program
Life Time(Tc≤75°C)		≥50,000 hours			80% Load，400Vac
MTBF		199,088 hours			400Vac,Full load, Ta=25°C (MIL-HDBK-217F)
Tc		90°C			
Warranty		5 years			Tc 75°C
Net Weight		2688g			
Dimension		367mm*89.5mm*44.5mmm			L x W x H

Note:1.All the parameters above are tested Ta 25°C and LED load, unless specified.
2.When using resistor dimming (parallel connection of dimming wires), if the number of parallels is: N, the dimming resistor should be realized 0-100% dimming range, resistance value: 91KΩ/N.

SHENZHEN SOSEN ELECTRONICS CO.,LTD.
10F, Pengzhanhui No 1 Building, Zhongxin Road No 233, Xinqiao Street, Baoan District, Shenzhen, China
0755-29358800 www.sosen.com sosen@sosen.com

Environmental Requirements

Parameter	Min.	Typ.	Max.	Remark
Operating Temperature(Tcase)	-40°C	25°C	+90°C	
Storage Temperature	-40°C	25°C	+90°C	
Operation Humidity	10%RH		90%RH	
Storage Humidity	5%RH		95%RH	
Altitude	-65m		4000m	

Safety and EMI/EMS Standards

Certification	Standard	Status	Remark
UL	UL8750	✓	
CUL	CAN/CSA C22.2 No.250.13		
ENEC	EN 61347-1 EN 61347-2-13 EN IEC 62384	✓	
RCM	AS/NZS61347.2.13		
CCC	GB/T 19510.1 GB/T 19510.213		
CE	EN 61347-1 EN 61347-2-13 EN 62493	✓	
	EN 301 489-1 EN 301 489-3 EN 300 330 EN 62479/EN 50663/EN 50665/EN 50364		For NFC wireless products

SHENZHEN SOSEN ELECTRONICS CO.,LTD.
10F, Pengzhanhui No 1 Building, Zhongxin Road No 233, Xinqiao Street, Baoan District, Shenzhen, China
0755-29358800 www.sosen.com sosen@sosen.com

Safety and EMI/EMS Standards

EMI/EMS	Standard	Status	Remark
Conduction Emission	EN IEC 55015	✓	
	GB/T 17743		
	FCC Part 15 Subpart B;ANSI C63.4		ClassB
Radiation Emission	EN IEC 55015	✓	
	GB/T 17743		
	FCC Part 15 Subpart B;ANSI C63.4		ClassB
Harmonic Current Emissions	EN IEC 61000-3-2	✓	ClassC
	GB 17625.1		ClassC
Surge	IEC/EN61000-4-5	✓	DM: 6kV,CM: 6kV,Criterion B
	ANSI/C82.77-5	✓	DM: 6kV,CM: 6kV,Criterion B
Ring Wave	IEC/EN 61000-4-12	✓	DM: 6kV,CM: 6kV,Criterion B
	ANSI/C82.77-5		DM: 6kV,CM: 6kV,Criterion B

SHENZHEN SOSEN ELECTRONICS CO.,LTD.
10F, Pengzhanhui No 1 Building, Zhongxin Road No 233,
Xinqiao Street, Baoan District, Shenzhen, China
0755-29358800 www.sosen.com sosen@sosen.com

Safety Test Items:

Safety Test Items	Technical Indicators		Remark
Insulation Requirements	UL Insulation Requirements	ENEC Insulation Requirements	
Input-Case	2U+1000	2U+1000	Basic insulation
Input-Dim	2U+1000	4U+2000	Reinforced insulation
Dim-Case	500Vac	500Vac	Basic insulation
Insulation Resistance	≥10MΩ		Input-DIM,Test voltage:500Vdc
Ground Resistance	≤0.1Ω		25A/1min
Leakage Current	≤0.75mA		480Vac

NOTE:

1.SOSEN warrants the LED Driver itself complies with EMC standard. However, LED Driver's EMC should be re-checked when integrated into lighting systems due to unexpected interference as component.

2.During the withstand voltage test, the input and output wires are shorted together to withstand voltage to ground.

3.When applying withstand voltage to ground, the input and outputlines need to be short-circuited together.

Performance Curves:

Input Inrush Current

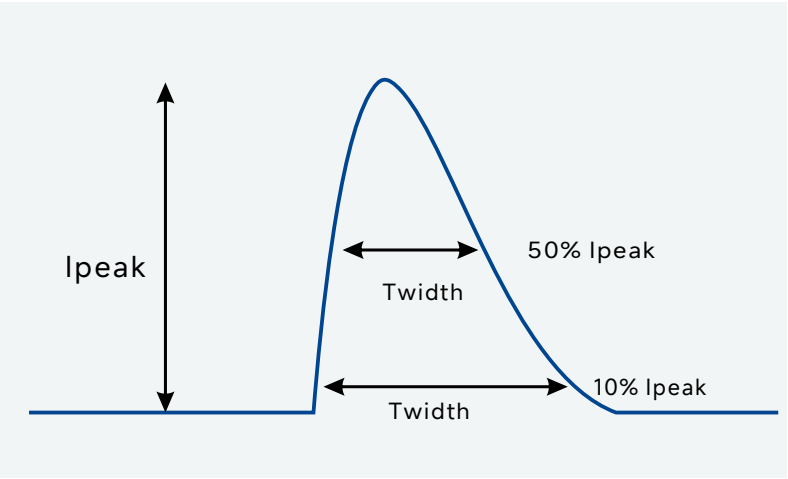

Vin	Ipeak	T(@10% of Ipeak)	T(@50% of Ipeak)
220Vac	20A	10mS	5mS
347Vac	30A	8mS	3mS
400Vac	40A	8mS	3mS
480Vac	50A	8mS	3mS

SHENZHEN SOSEN ELECTRONICS CO.,LTD.
10F, Pengzhanhui No 1 Building, Zhongxin Road No 233, Xinqiao Street, Baoan District, Shenzhen, China
0755-29358800 www.sosen.com sosen@sosen.com

Performance Curves:

O/P Voltage Vs. O/P Current(Dim/AOC Window)

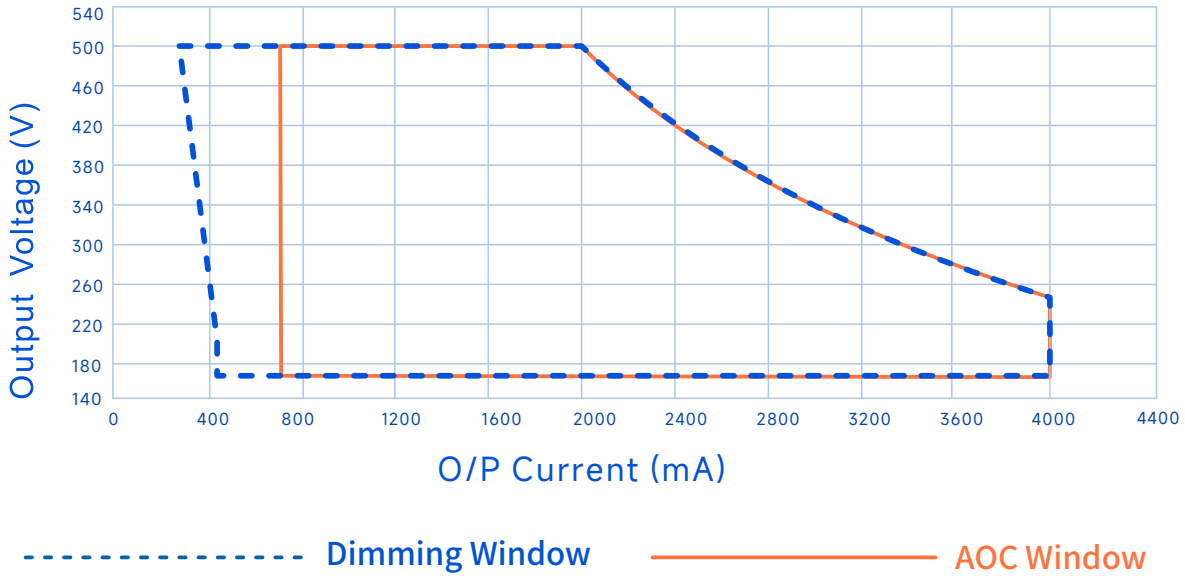

SHENZHEN SOSEN ELECTRONICS CO.,LTD.
10F, Pengzhanhui No 1 Building, Zhongxin Road No 233,
Xinqiao Street, Baoan District, Shenzhen, China
0755-29358800 www.sosen.com sosen@sosen.com

Performance Curves:

Efficiency Vs. O/P Voltage (Vin=220Vac)

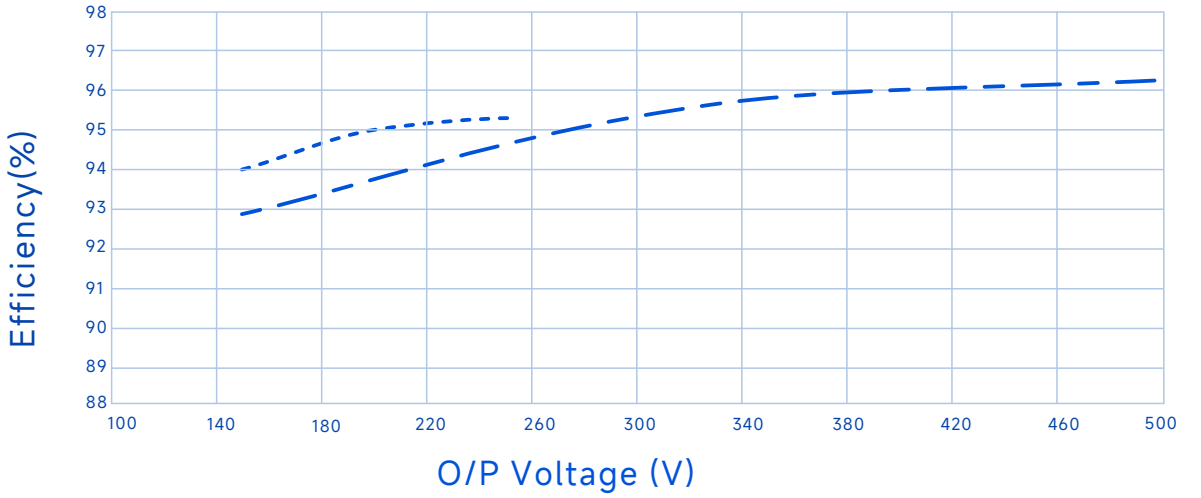

------- Io=4000mA — — — Io=2000mA

Efficiency Vs. O/P Voltage (Vin=347Vac)

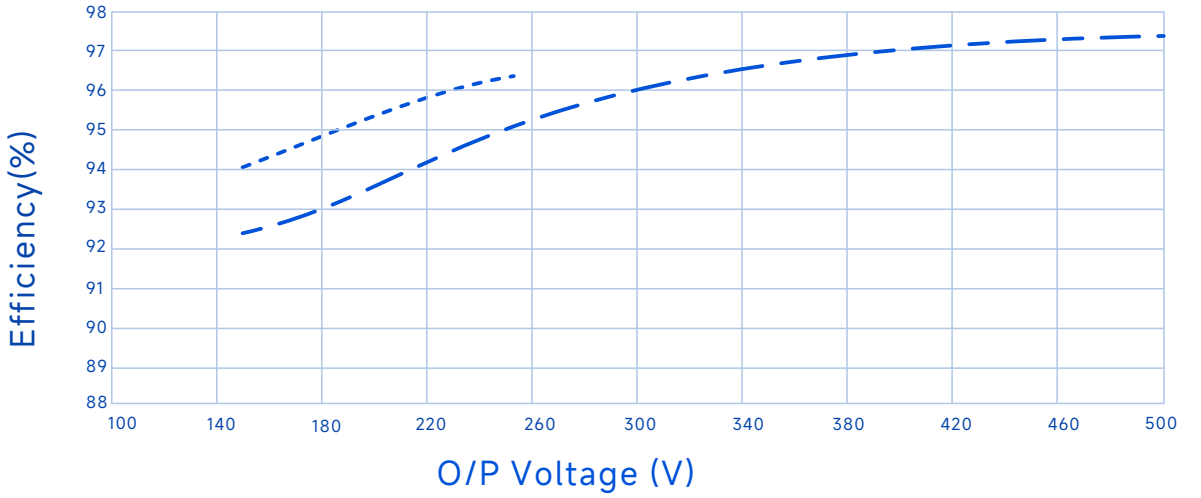

------- Io=4000mA — — — Io=2000mA

SHENZHEN SOSEN ELECTRONICS CO.,LTD.
10F, Pengzhanhui No 1 Building, Zhongxin Road No 233, Xinqiao Street, Baoan District, Shenzhen, China
0755-29358800 www.sosen.com sosen@sosen.com

Performance Curves:

Efficiency Vs. O/P Voltage (Vin=400Vac)

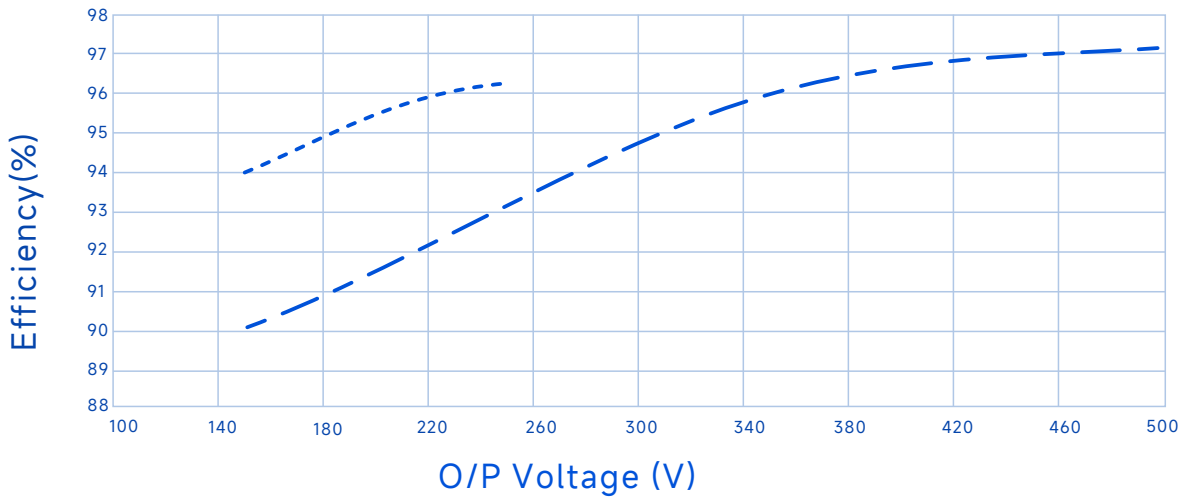

------- Io=4000mA — — — Io=2000mA

Efficiency Vs. O/P Voltage (Vin=480Vac)

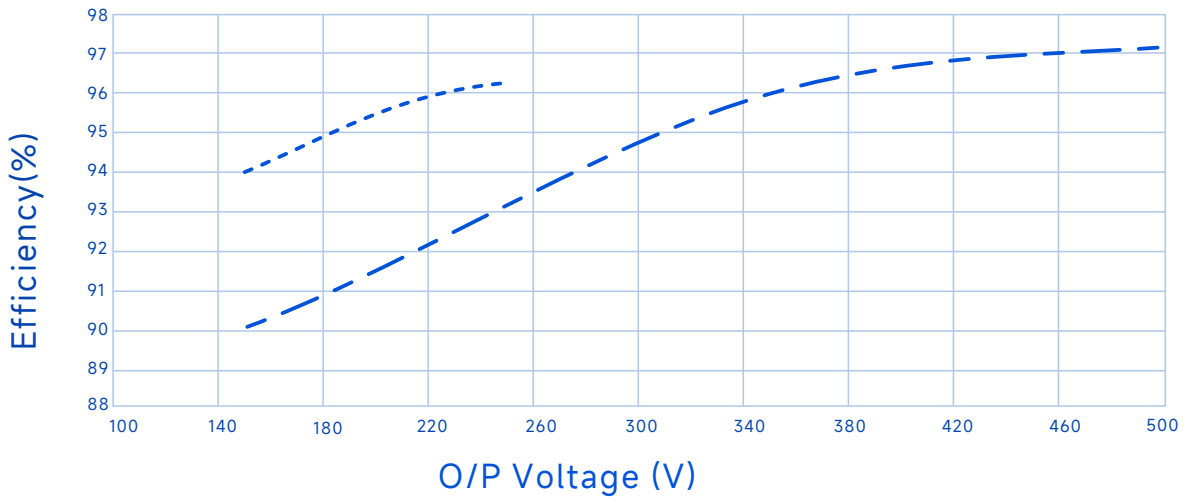

------- Io=4000mA — — — Io=2000mA

SHENZHEN SOSEN ELECTRONICS CO.,LTD.
SHENZHEN SOSEN ELECTRONICS CO.,LTD
10F, Pengzhanhui No 1 Building, Zhongxin Road No 233, Xinqiao Street, Baoan District, Shenzhen, China
0755-29358800 www.sosen.com sosen@sosen.com

Performance Curves:

Power Factor Vs. O/P Power

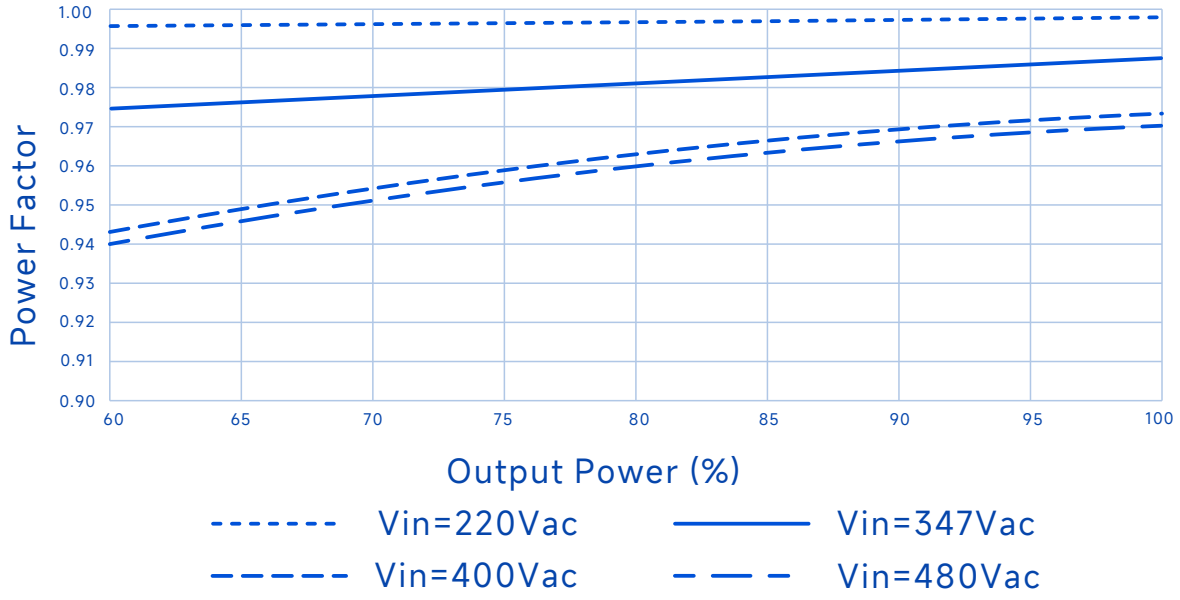

THD Vs. O/P Power

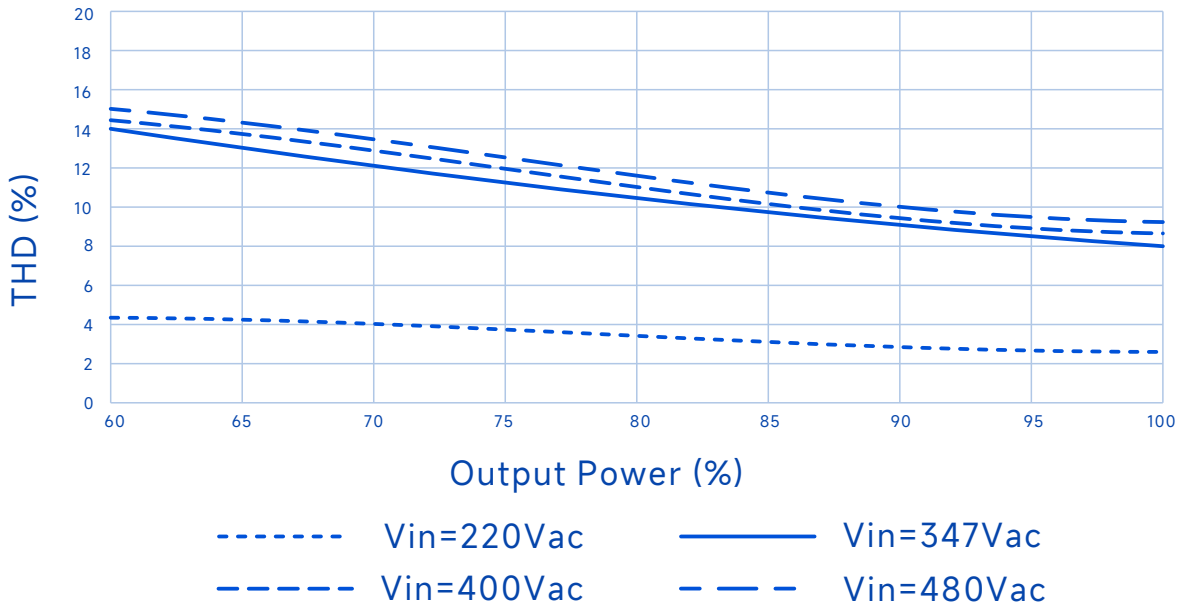

SHENZHEN SOSEN ELECTRONICS CO.,LTD.
10F, Pengzhanhui No 1 Building, Zhongxin Road No 233, Xinqiao Street, Baoan District, Shenzhen, China
0755-29358800 www.sosen.com sosen@sosen.com

Performance Curves:

O/P Power Vs. Input Voltage

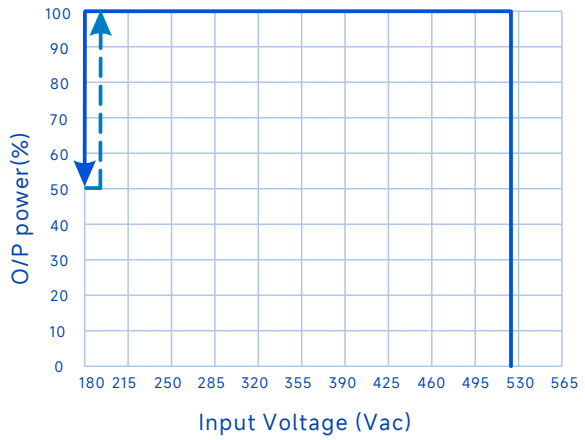

O/P Power Vs. Case Temperature

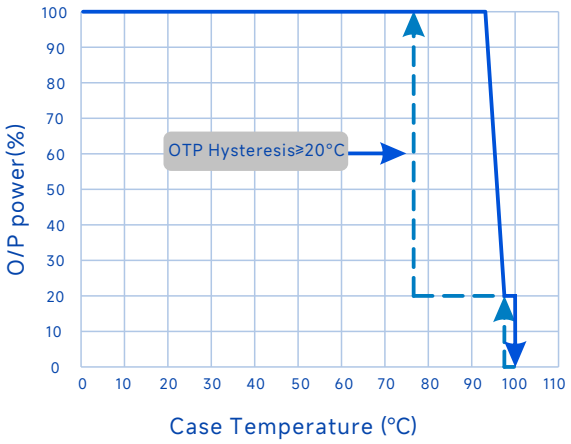

O/P Power Vs. Dimming

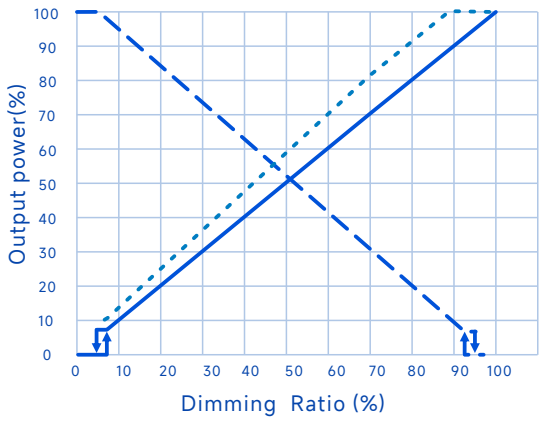

Lifetime Vs. Case Temperature

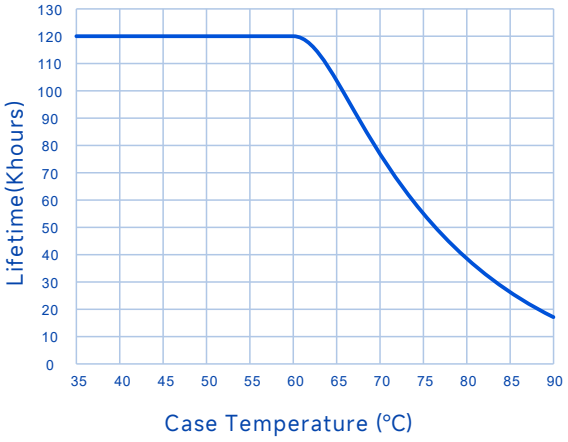

—— 0-10V,0-5V,PWM
– – 10-0V,5-0V
···· Resistor Dimming(100KΩ)

SHENZHEN SOSEN ELECTRONICS CO.,LTD.
10F, Pengzhanhui No 1 Building, Zhongxin Road No 233,
Xinqiao Street, Baoan District, Shenzhen, China
0755-29358800 www.sosen.com sosen@sosen.com

Programming connection diagram

Legacy Timer: Driver's O/P follows the pre-programmed timing curve after turn-on.
Auto-Adjust by Percentage: Driver's O/P will be adjusted by automatically changed dimming curve by the period percentage based on the latest 5 dimming curve.
Auto-Adjust by Mid-point: Driver's O/P will be adjusted by automatically changed dimming curve by mid-point based on the latest 5 dimming curve.

Note:

1. During the programming process, all programming functions can be realized without powering on the driver.
2. All programming functions can be realized without powering off the drive that is currently in use.
3. It can be disconnected from the PC and offline programming can be implemented.

Constant Lumen Output

Constant Lumen Output are design to maintain fixture's stable output lumen by increasing driver's output current within driver's life span to counteract LED lumen degradation.

SHENZHEN SOSEN ELECTRONICS CO.,LTD.
10F, Pengzhanhui No 1 Building, Zhongxin Road No 233, Xinqiao Street, Baoan District, Shenzhen, China
0755-29358800 www.sosen.com sosen@sosen.com

Parameter		Remark
Dimming Settings	Dimming voltage default 10V (source current)	Factory Default Mode(other models)
	Dimming voltage default 0V (sink current)	Factory Default Mode(BHB* models)

Note:
According to the application of the dimmer, customers can set the two modes of “dimming voltage default 10V (output current)” / “dimming voltage default 0V (draw current)” by Songsheng programming software.

Settings Interface

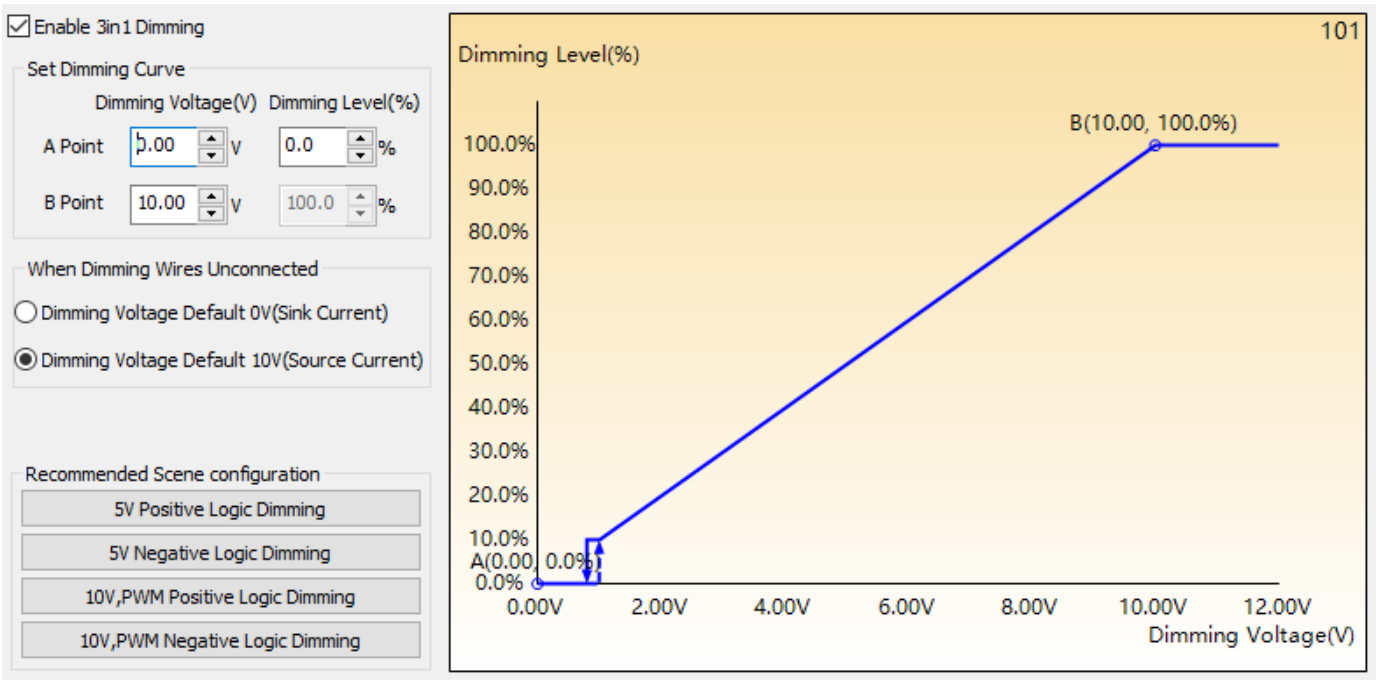

SHENZHEN SOSEN ELECTRONICS CO.,LTD.
10F, Pengzhanhui No 1 Building, Zhongxin Road No 233, Xinqiao Street, Baoan District, Shenzhen, China
0755-29358800 www.sosen.com sosen@sosen.com

Mechanical Characteristics

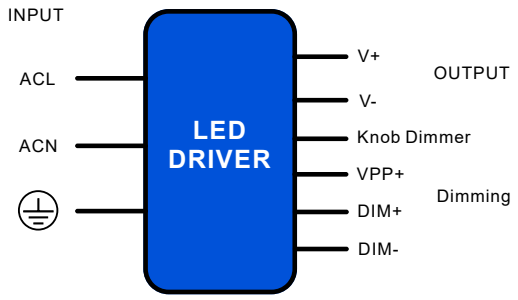

AC Input Cable(Exposed Length 450±10mm):

Global model: SJOW,3*17AWG,O.D: 8.0mm,Brown:L,Blue:N,Yellow/Green: ⏚
UL model: SJTW,3*16AWG,O.D: 8.5mm,Black:L,White:N,Green: ⏚

DC O/P Cable(Exposed Length 250±10mm):

Global model: SJOW,2*12AWG,O.D: 10.7mm,Black:V+,White:V-
Global model:SJTW,2*12AWG,O.D:9.2mm,Black:V+,White:V-,
Yellow/Green:GND(Suffix-G) ⏚

DIM/AUX Power/Programming Cable:

Knob Dimmer, RJ25 port

Name Description	Standard Code	mm(In.)
Case Length	L3	340(13.38)
Case Width	W1	89.5(3.52)
Case Height	H	44.5(1.75)
Overall Length	L1	367(14.45)
Mounting Hole Length	L2	353.5(13.92)
Mounting Hole Width	W2	40(1.57)
TC Point Position	X	160(6.30)
TC Point Position	Y	45(1.77)

Note
1,Please follow the "LED Driver User Manual" obtained from SOSEN's official website for assembly.
2,AC Input Cable,DC O/P Cable,DIM/AUX Power/Programming Cable: Peeled length of cable:43±5mm, Tinned length of wire:10±2mm

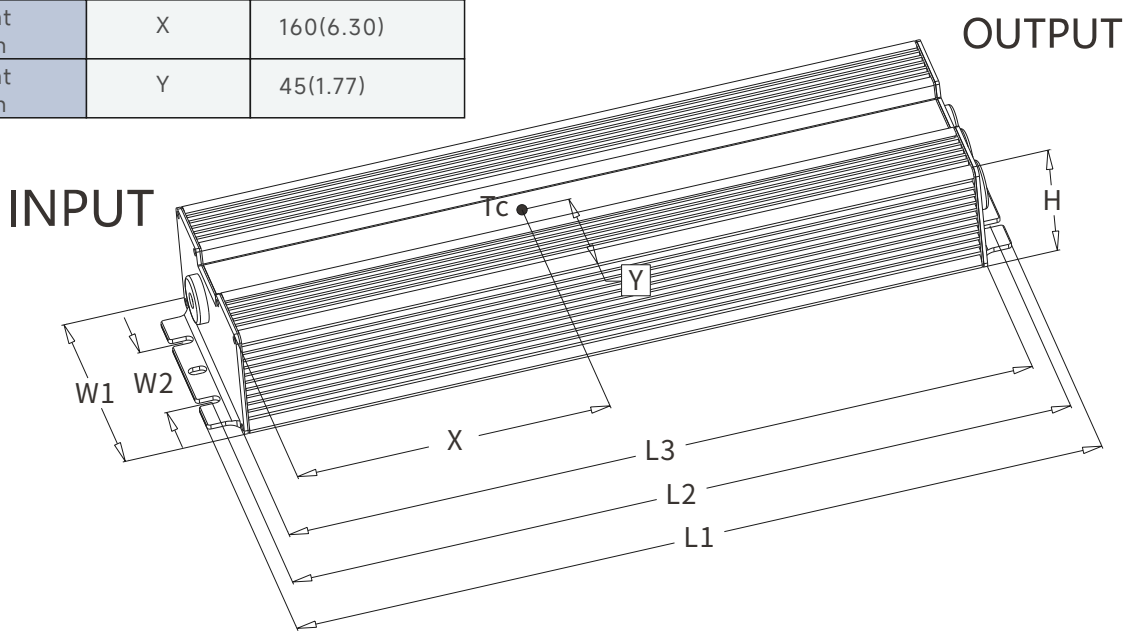

SHENZHEN SOSEN ELECTRONICS CO.,LTD.
10F, Pengzhanhui No 1 Building, Zhongxin Road No 233, Xinqiao Street, Baoan District, Shenzhen, China
0755-29358800 www.sosen.com sosen@sosen.com

Mechanical Characteristics(BH-M2/BH-M3 model)

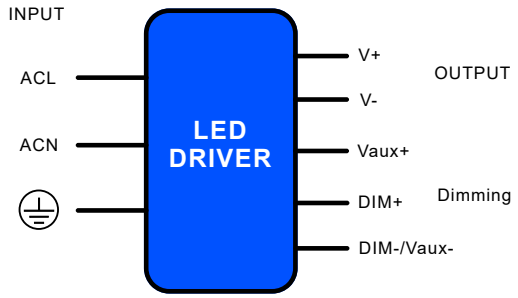

AC INPUT	DC OUTPUT		DIM OUTPUT
M19LLT-3 Pin	M19LLT-2 Pin	M19LLT-3 Pin	M12LLT-3 Pin
M19JNICON-3 Pin	M19JNICON-2 Pin	M19JNICON-3 Pin	M12JNICON-3 Pin
N L	V- V+	V- V+	Vaux+ DIM-/Vaux- DIM+

Name Description	Standard Code	mm(In.)
Case Length	L3	340(13.38)
Case Width	W1	89.5(3.52)
Case Height	H	44.5(1.75)
Overall Length	L1	367(14.45)
Mounting Hole Length	L2	353.5(13.92)
Mounting Hole Width	W2	40(1.57)
TC Point Position	X	160(6.30)
TC Point Position	Y	45(1.77)

Note
1,Please follow the "LED Driver User Manual" obtained from SOSEN's official website for assembly.
2,AC Input Cable,DC O/P Cable,DIM/AUX Power/Programming Cable: Peeled length of cable:43±5mm, Tinned length of wire:10±2mm

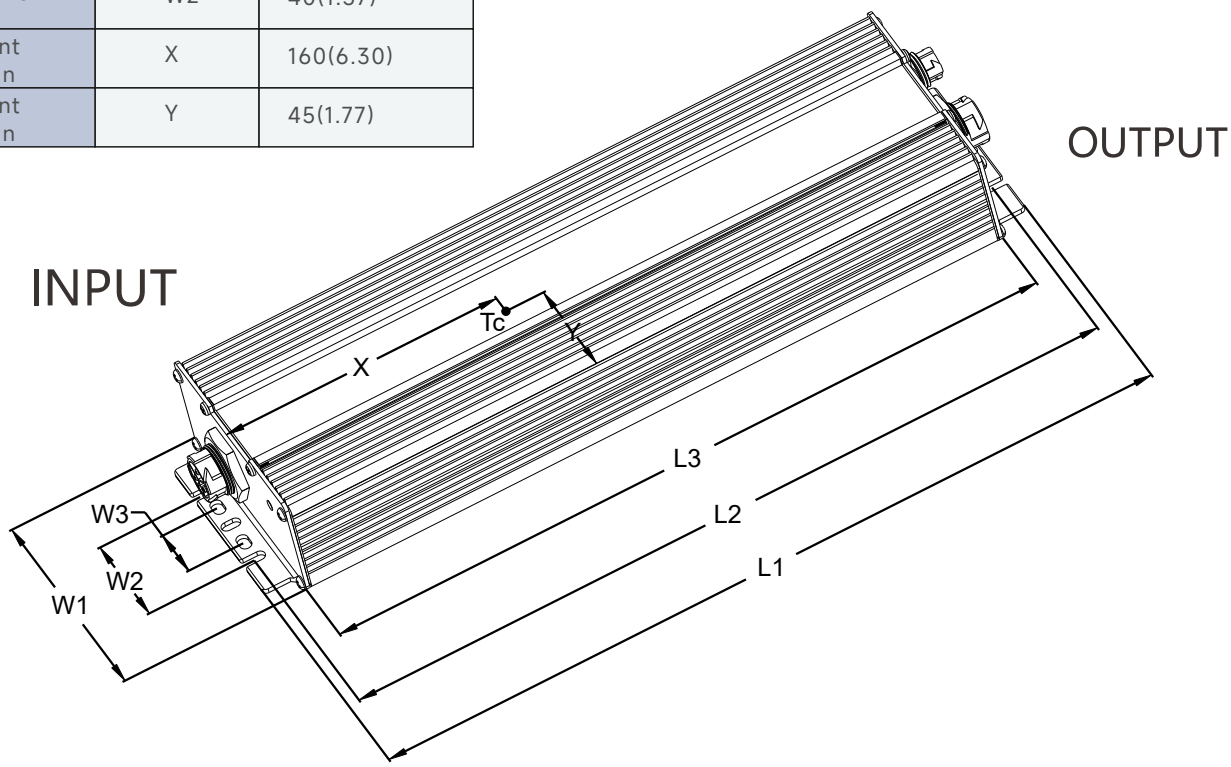

SHENZHEN SOSEN ELECTRONICS CO.,LTD.
10F, Pengzhanhui No 1 Building, Zhongxin Road No 233, Xinqiao Street, Baoan District, Shenzhen, China
0755-29358800 www.sosen.com sosen@sosen.com

Mechanical Characteristics(BHB-M2/BHB-M3 model)

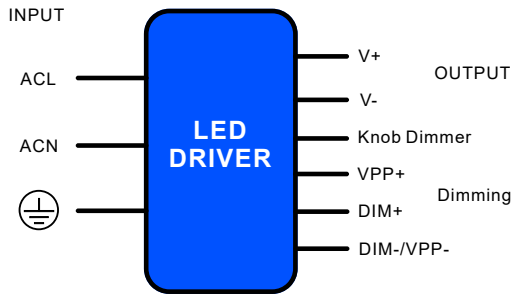

AC INPUT	DC OUTPUT	
M19LLT-3 Pin	M19LLT-2 Pin	M19LLT-3 Pin
M19JNICON-3 Pin	M19JNICON-2 Pin	M19JNICON-3 Pin
N L	V- V+	V- V+
DIM/Programming Cable Knob Dimmer, RJ25 port		

Name Description	Standard Code	mm(In.)
Case Length	L3	340(13.38)
Case Width	W1	89.5(3.52)
Case Height	H	44.5(1.75)
Overall Length	L1	367(14.45)
Mounting Hole Length	L2	353.5(13.92)
Mounting Hole Width	W2	40(1.57)
TC Point Position	X	160(6.30)
TC Point Position	Y	45(1.77)

Note
1,Please follow the "LED Driver User Manual" obtained from SOSEN's official website for assembly.
2,AC Input Cable,DC O/P Cable,DIM/AUX Power/Programming Cable: Peeled length of cable:43±5mm, Tinned length of wire:10±2mm

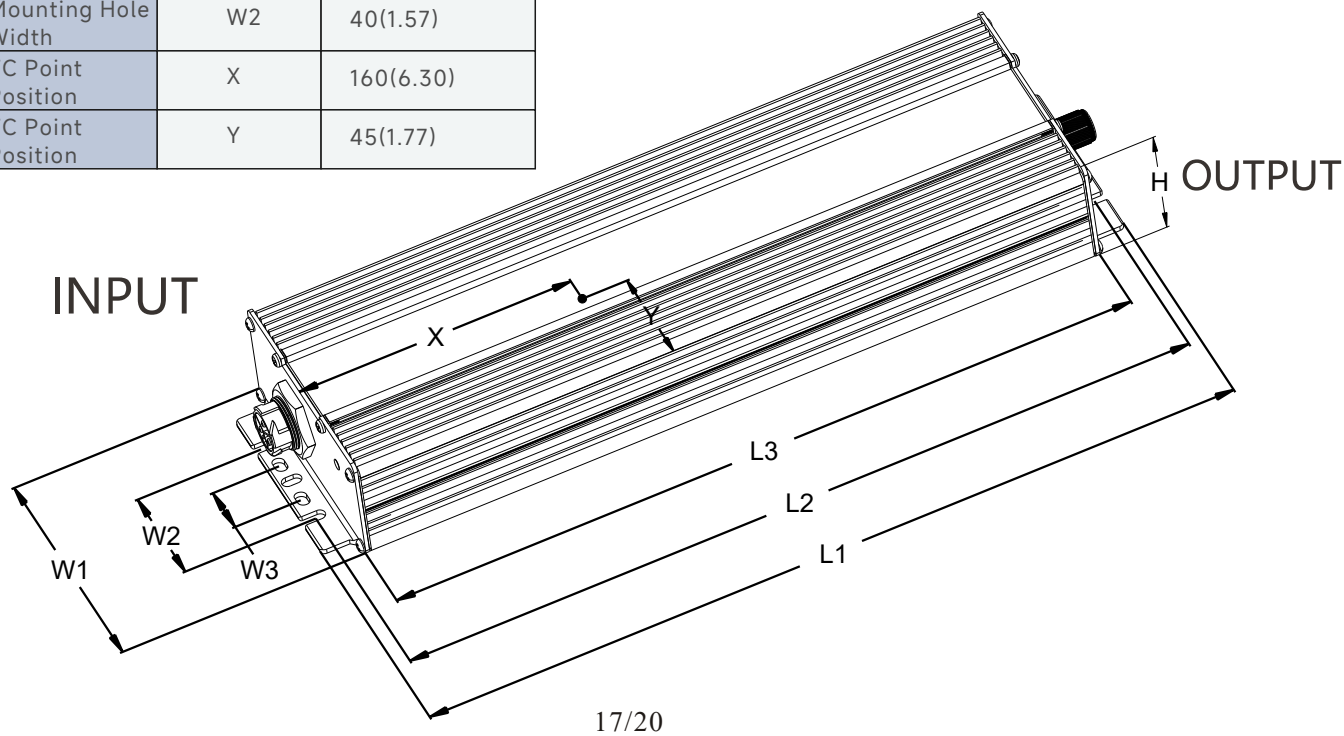

SHENZHEN SOSEN ELECTRONICS CO.,LTD.
10F, Pengzhanhui No 1 Building, Zhongxin Road No 233, Xinqiao Street, Baoan District, Shenzhen, China
0755-29358800 www.sosen.com sosen@sosen.com

Knob/RJ25 terminal definition:

PLUG

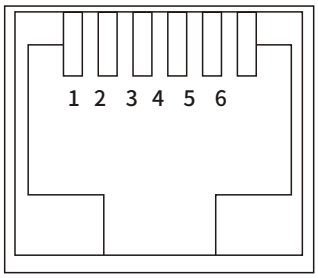

JACK

RJ25 PIN	
1&6	VPP+
2&5	DIM+
3&4	DIM-/VPP-

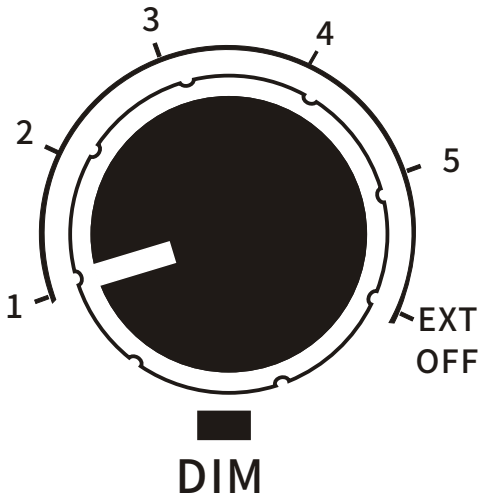

	Definition
1	40%loset
2	50%loset
3	60%loset
4	80%loset
5	100%loset
EXT/OFF	External Dimming /Dim to off

SHENZHEN SOSEN ELECTRONICS CO.,LTD.

10F, Pengzhanhui No 1 Building, Zhongxin Road No 233, Xinqiao Street, Baoan District, Shenzhen, China
0755-29358800 www.sosen.com sosen@sosen.com

Assembly Tips

1. Dimming or AUX Power tinned connectors should be capped if not used to avoid dimming or AUX Power parts damage from external signals.
2. Safety space between aluminum base and LED coppers >5.6mm.
3. Safety space/coppers between LED+ and LED- ≥3.6mm.
4. Minimize the copper area on the aluminum PCB to reduce parasitic capacitance and leakage current.
5. It is recommended to design LED beads in parllel first and then in series.
6. The insulation level of LED light panels should meet the reliability design requirements.
7. It's recommended to add resistors or capacitors in parallel with the LED on PCB to reduce the risk of surge when a non isolated LED driver is used for the luminaire
8. For other precautions, please refer to the "LED Driver User Manual".

Package

- Outside carton dimension: L×W×H =495mm×385mm×162mm;
- 5PCS/Carton;
- Net weight/Piece:2.688kg;Gross weight/Carton:14.5kg;
- Please refer to the product name, model number, manufacturer identification, QC PASS, manufacturing date on the package.

Transportation

Packaging is designed suitable for transportation by trucks, vessels and flights. The products should be avoided direct sunlight and rain, loaded/unloaded with caution.

Storage

The product storage meets the standard of the GB 3873—83.

Products should be rechecked if stored for over 1 year before assembly.

RoHS

Products comply with RoHS Directive (2011/65/EU) and amendment 2015/863/EU.

SHENZHEN SOSEN ELECTRONICS CO.,LTD.

10F, Pengzhanhui No 1 Building, Zhongxin Road No 233, Xinqiao Street, Baoan District, Shenzhen, China

0755-29358800 www.sosen.com sosen@sosen.com

深圳市欣盛电源技术有限公司 2025/08/20 受控文件 文控中心
深圳市欣盛电子股份有限公司 2025/08/20 受控文件 文控中心

Revision History

Version	Description of Update	Updated Date	Remark
V00	Original Release	2025/08/06	

SHENZHEN SOSEN ELECTRONICS CO.,LTD.
10F, Pengzhanhui No 1 Building, Zhongxin Road No 233,
Xinqiao Street, Baoan District, Shenzhen, China
0755-29358800 www.sosen.com sosen@sosen.com